FOR INFORMATION ONLY
NOT FOR MANUFACTURING PURPOSES

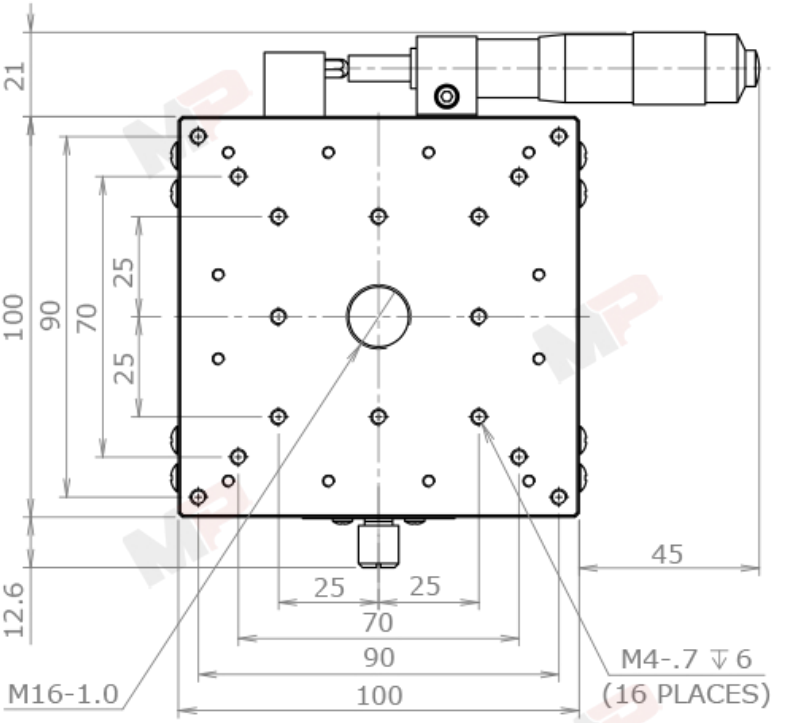

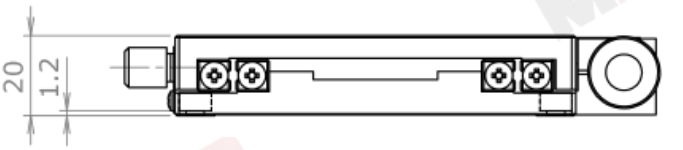

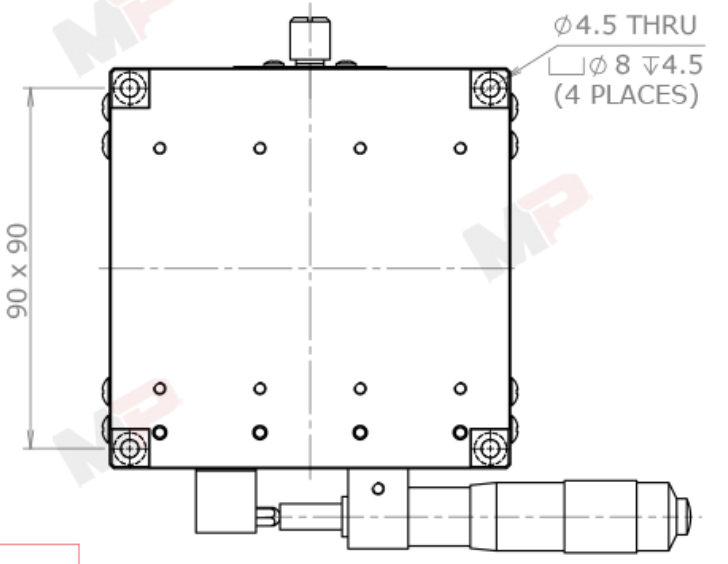

Linear Translation Stage	
Axes of Travel	X
Material	Aluminum Alloy
Platform	100 mm x 100 mm
Travel	±12.5 mm
Max. Load	14 kg
Resolution	0.01 mm
Accuracy	0.02 mm

DRAWING PROJECTION

	NAME	DATE
DRAWN	JS	6/27/2012
APPROVAL	GW	6/27/2012

COPYRIGHT © 2012 BY MPOSITIONING CO., LTD.

UNLESS OTHERWISE SPECIFIED DIMENSIONS ARE IN MILLIMETERS

MODEL NO.: T100X-25R

A4

REVISION: 00